LIVV DOWNLIGHT

Type-IC (IC), Chicago Plenum (CP), Airtight (AT)

Lumenwerx

INSTALLATION INSTRUCTIONS

This product must be installed in accordance with the National Electrical Code and all applicable local codes, by a person familiar with the construction and operation of the product, and the hazards involved. Proper grounding is required for safety.

Ce produit doit être installé suivant le code national de l'électricité, ainsi que tous les codes locaux applicables, par une personne familière avec la construction et le fonctionnement du produit, ainsi que tous les risques qui y sont associés. La mise à terre électrique est obligatoire pour la sécurité.

Disconnect power before installation or servicing.

Wire dimming conductors as Class 1.

Do not cover the light element lens or heatsink with any materials or adhesive tapes when the fixture is powered.

A luminaire with more than one power supply connection means shall be connected to only one branch circuit.

For electrical connections, please refer to the wiring diagram guide.

Installation steps are shown with LIVV 2.5", also applicable for LIVV 3.5".

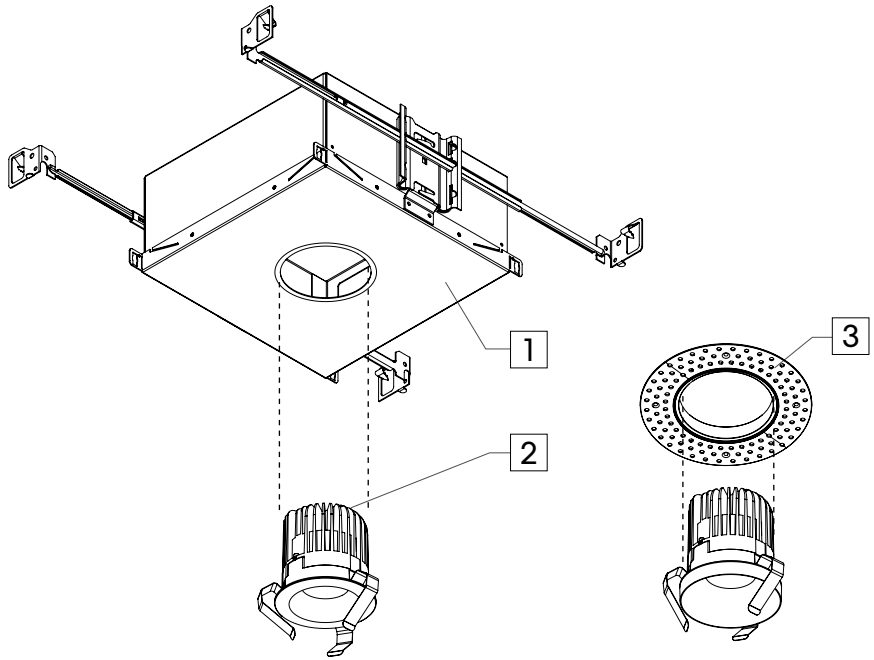

Flanged Trim

Trimless Drywall Mudplate

INDEX

Overview Installation type	P.2
Bar hanger	P.2
Electrical connection	P.3
Ceiling Preparation	P.3
Light Element	P.4

ITEMS LIST

1	Mounting frame
2	Light element
3	Mudplate

TOOLS REQUIRED

- Phillips screwdriver
- Hole saw

LIVV DOWNLIGHT

Type-IC (IC), Chicago Plenum (CP), Airtight (AT)

INSTALLATION TYPE

IC - TYPE-IC
CP - CHICAGO PLENUM TYPE-IC (CCEA)
AT - AIRTIGHT TYPE-IC

Minimum plenum height - 4 1/16"
No setback from insulation required

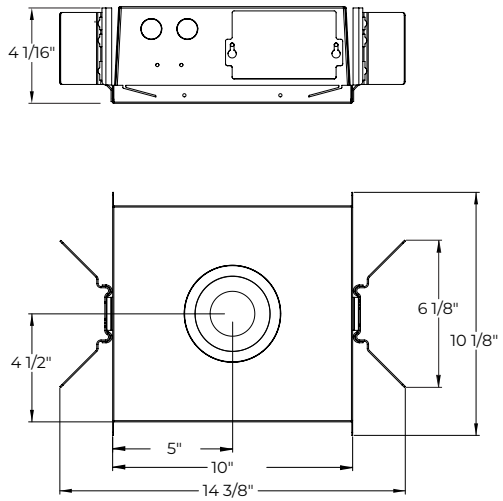

BAR HANGER INSTALLATION

Install the housing by referring to the installation instructions in the downlight mounting option guide.

LIVV DOWNLIGHT

Type-IC (IC), Chicago Plenum (CP), Airtight (AT)

Lumenwerx

ELECTRICAL CONNECTION

1 REMOVE COVER.

Remove the cover **[A]** from the box **[B]**.

Note: For Chicago Plenum, remove the gasket also.

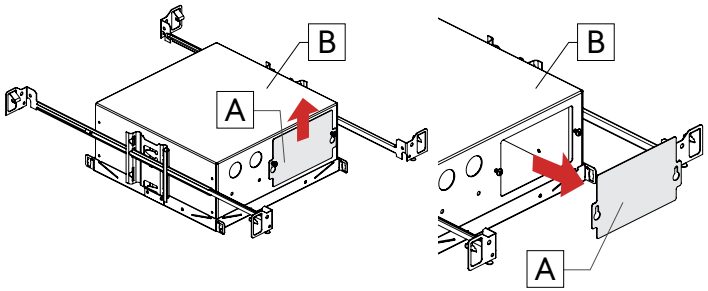

2 MAKE ELECTRICAL CONNECTIONS.

Install main power cable **[C]** to knockout and make the electrical connections between main power cable **[C]** and the connector **[D]** with wire nuts **[E]**.

Note: For electrical connections, please refer to the wiring diagram guide.

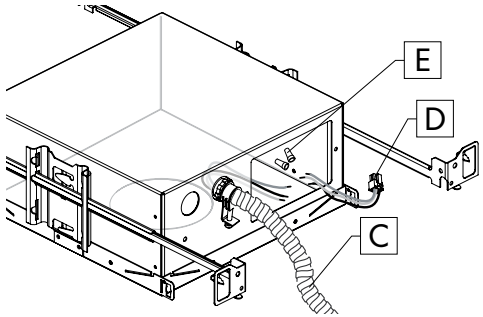

3 REINSTALL COVER.

Reinstall cover **[A]**.

Note: For Chicago Plenum, reinstall the gasket also.

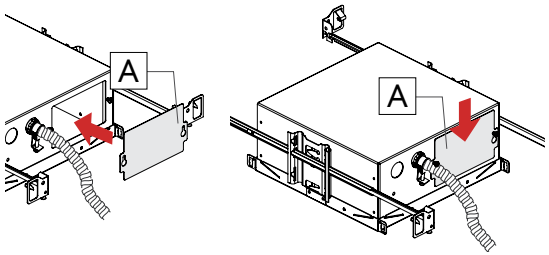

CEILING PREPARATION

1 PREPARE CEILING.

DRYWALL CEILING

Cut opening in drywall ceiling **[F]** with drywall knife **[G]**.

	TRM	TLD	TLMP
2 1/2"	Ø 3 1/8"	Ø 3 1/8"	Ø 3 1/2"
3 1/2"	Ø 3 3/4"	Ø 3 1/2"	Ø 4 1/4"

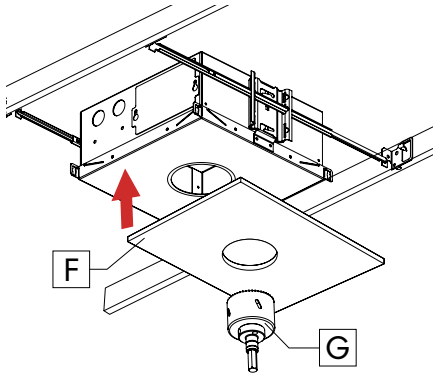

MILLWORK CEILING

Cut opening in wood ceiling with a router. See diagram below for dimensions needed to create the opening.

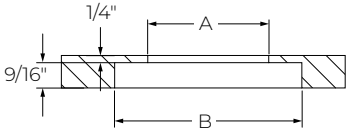

	A	B
2 1/2"	Ø 3 1/8"	Ø 3 5/16"
3 1/2"	Ø 3 3/4"	Ø 4 1/16"

TRIMLESS MUDPLATE

Attach mudplate **[H]** to ceiling and fix with screws **[I]** onto ceiling. Plaster and sand over mudplate **[H]**.

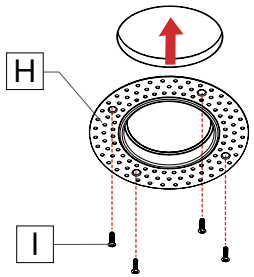

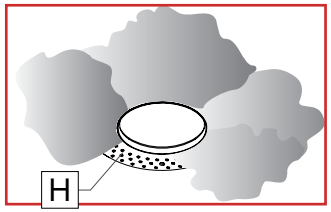

LIVV DOWNLIGHT

Type-IC (IC), Chicago Plenum (CP), Airtight (AT)

Lumenwerx

LIGHT ELEMENT

1 LOWER CONNECTOR'S CABLE.

Bring the connector **[D]** and the safety cable **[J]** from the ceiling opening.

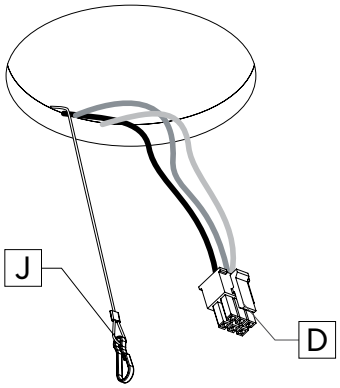

2 MAKE ELECTRICAL CONNECTIONS.

Connect to the top of the light element **[K]** by inserting the connector **[D]** into the slot.

Secure the safety cable **[J]** from the connection box and from the light element **[K]** together.

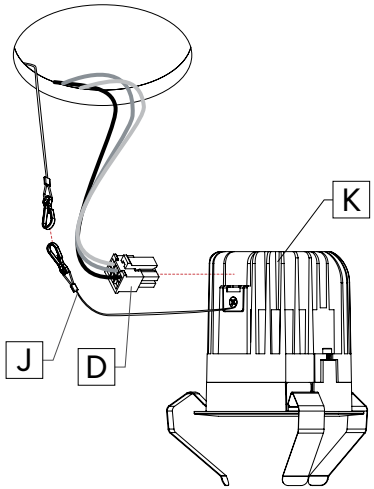

3 INSTALL LIGHT ELEMENT.

Squeeze the spring clips **[L]** upwards on the light fixture.

Insert the light element **[K]** into the opening until spring clips snap back above the ceiling in the housing.

FLANGED TRIM OR DROP TRIM

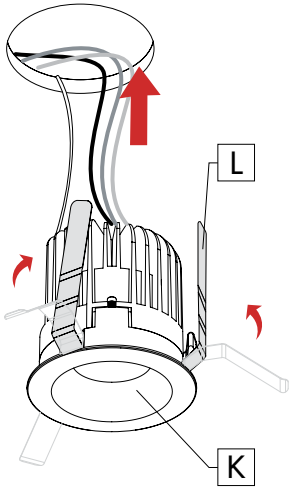

TRIMLESS MUDPLATE

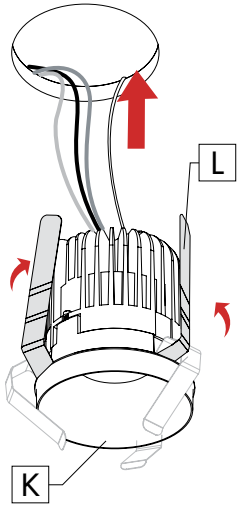

FLANGED TRIM

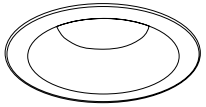

TRIMLESS MUDPLATE

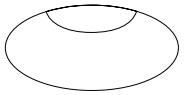

DROP TRIM

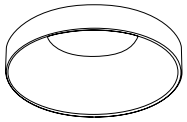

www.lumenwerx.com (T) 514-225-4304 (F) 514-931-4862 © All rights are reserved to Lumenwerx ULC.
Lumenwerx ULC. reserves the right to change or modify product specifications without notification.