INSTALLATION INSTRUCTIONS

⚠ This product must be installed in accordance with the National Electrical Code and all applicable local codes, by a person familiar with the construction and operation of the product, and the hazards involved. Proper grounding is required for safety.

Ce produit doit être installé suivant le code national de l'électricité, ainsi que tous les codes locaux applicables, par une personne familière avec la construction et le fonctionnement du produit, ainsi que tous les risques qui y sont associés. La mise à terre électrique est obligatoire pour la sécurité.

⚠ Disconnect power before installation or servicing.

⚠ Do not cover the light element lens or heatsink with any materials or adhesive tapes when the fixture is powered.

⚠ Handle the LED cartridge carefully during removal and installation. Tools must not touch the LED chips. Contact may result in damage and LED failure.

⚠ Wire dimming conductors as Class 1.

⚠ A luminaire with more than one power supply connection means shall be connected to only one branch circuit.

⚠ For luminaires specified as recessed, clearance between the sides of the luminaire and parts of the building must be 1/2" minimum; clearance to insulating materials to be 3" minimum, unless luminaire is IC rated.

⚠ For luminaires installed in wet locations, properly seal all mounting and electrical points.

⚠ Warranty claims will not be accepted if incorrect driver or light element is used.

www.lumenwerx.com (T) 514-225-4304 (F) 514-931-4862 © All rights are reserved to Lumenwerx ULC.
Lumenwerx ULC. reserves the right to change or modify product specifications without notification.

CURVIA PERIMETER
Drywall Mud Flange

Lumenwerx

SINGLE FIXTURE

For electrical connections, please refer to the wiring diagram guide.

For remote driver box installation instructions, please refer to the remote driver installation sheet.

Shown with Curvia Shallow option, applicable to Level and Deep also.

1 PREPARE THE CEILING.

Prepare the area where the fixture is going to be installed. Cut a hole in the ceiling and locate the threaded rods **[A]** according to the dimensions **[*]** given in the client drawings.

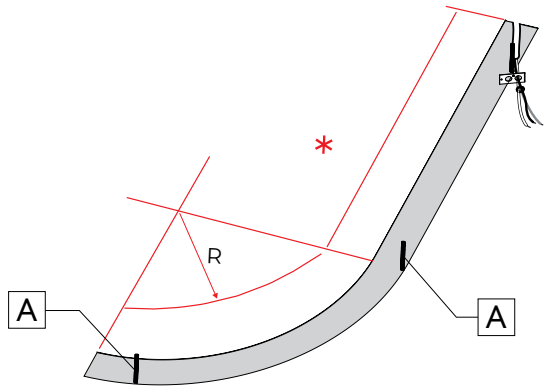

2 REMOVE LENS.

Remove the lens **[C]** from the fixture **[B]** using the provided lens tool and keep them in a safe place.

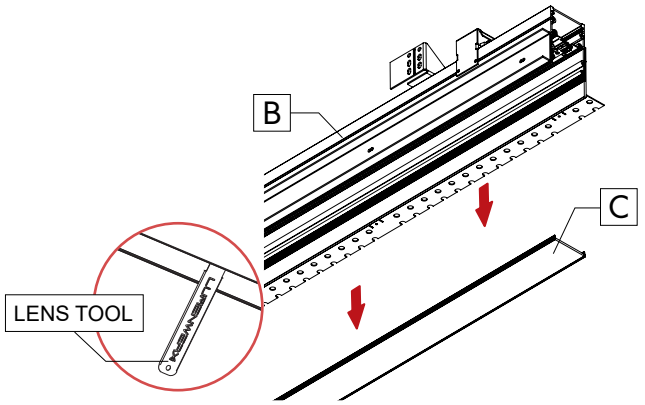

3 REMOVE CARTRIDGES.

Unscrew and remove cartridge(s) **[D]** from the fixture **[B]**.

Disconnect LED molex connector by taking a pointed object and pressing on the two tabs on the top.

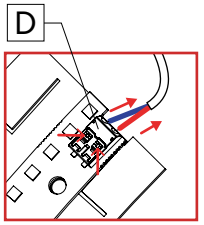

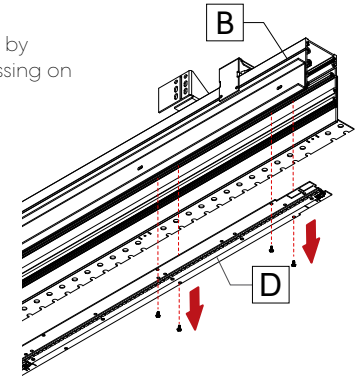

4 MAKE ELECTRICAL CONNECTIONS.

Remove the power plate **[G]** from the fixture **[B]**. Pass the main power cable **[E]** (by others) through the cable connector **[F]** (by others), and install onto the provided power plate **[G]**.

Make electrical connections between the main power cable **[E]** and fixture cable **[H]** using wire nuts **[I]** (by others). Reinstall the power plate **[G]** to the fixture **[B]**.

Note: Number of wires may vary.

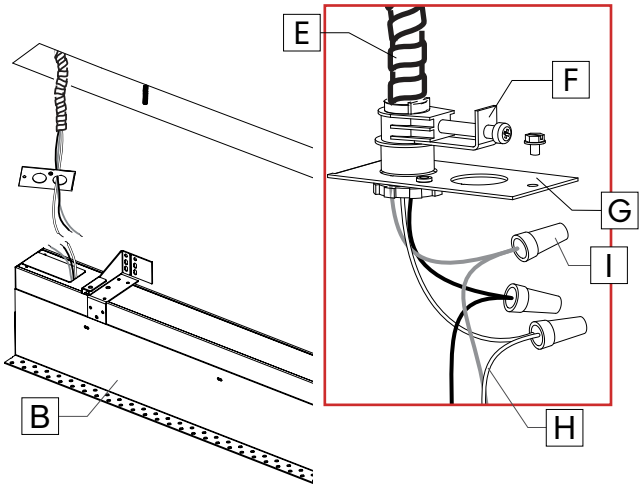

Intertek

www.lumenwerx.com (T) 514-225-4304 (F) 514-931-4862 © All rights are reserved to Lumenwerx ULC.
Lumenwerx ULC. reserves the right to change or modify product specifications without notification.

CURVIA PERIMETER
Drywall Mud Flange

SINGLE FIXTURE

5 INSTALL THE FIXTURE.

Insert fixture into the pre-cut hole in the ceiling and align the threaded rods with the holes in the top of the fixture.

Fasten fixture to 1/4" - 20 threaded rods **[A]** using washer **[J]** and nut **[K]**.

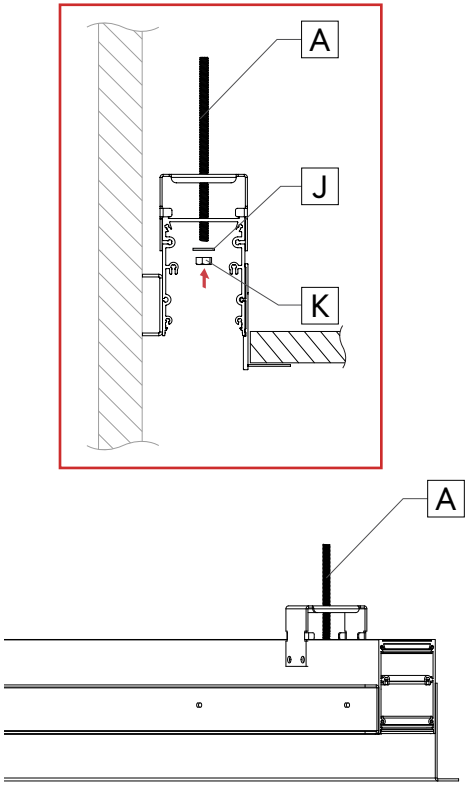

ALTERNATIVE INSTALLATION OPTION

If the fixture is installed before the drywall, fasten threaded rod **[A]** on the U-plate **[N]** using washer **[J]** and nut **[K]**.

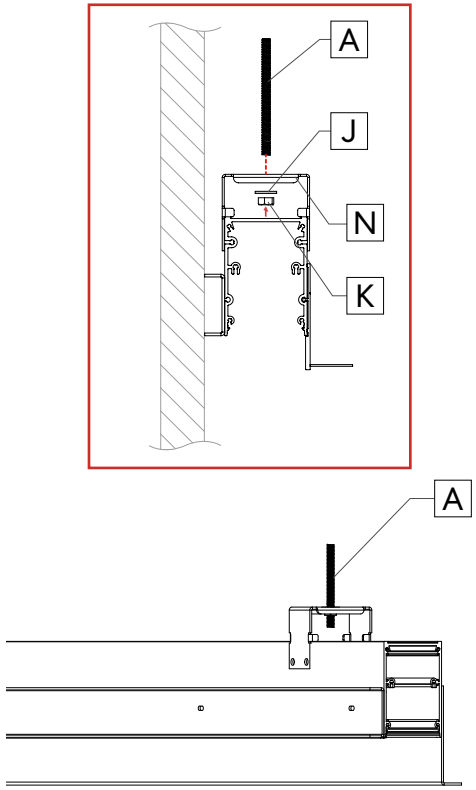

ALTERNATIVE INSTALLATION OPTION

Remove the U-plate **[N]** with either a hammer or a saw and fasten threaded rod **[A]** on the fixture **[B]** using washer **[J]** and nut **[K]**.

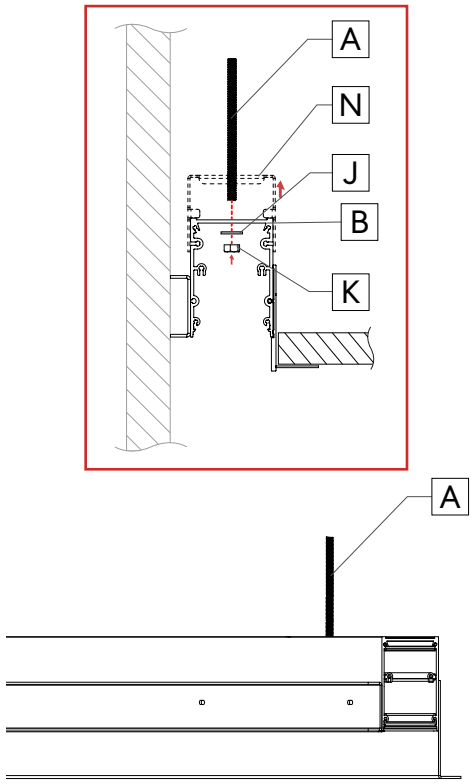

www.lumenwerx.com (T) 514-225-4304 (F) 514-931-4862 © All rights are reserved to Lumenwerx ULC.
Lumenwerx ULC. reserves the right to change or modify product specifications without notification.

CURVIA PERIMETER
Drywall Mud Flange

Lumenwerx

SINGLE FIXTURE

6 SECURE THE FIXTURE.

For extra support, use the provided wall bracket **[L]** to fix the fixture **[B]** to the wall.

1. Screw the wall bracket **[L]** to the fixture.

2. Screw the fixture **[B]** with the bracket to the wall.

Secure the fixture to the ceiling by fastening drywall screws **[M]** (by others) through the flanges into the ceiling.

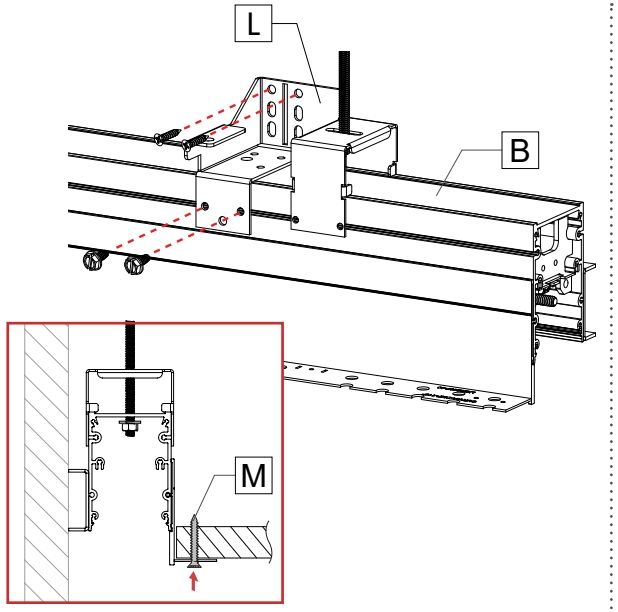

7 REINSTALL CARTRIDGES.

Reconnect LED molex connector and reinstall the cartridge(s) **[D]** with screws to the fixture **[B]**.

Note: Connect blue wire into the **[-]** negative terminal and the red wire into the **[+]** positive terminal.

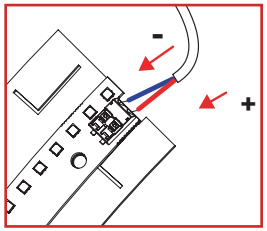

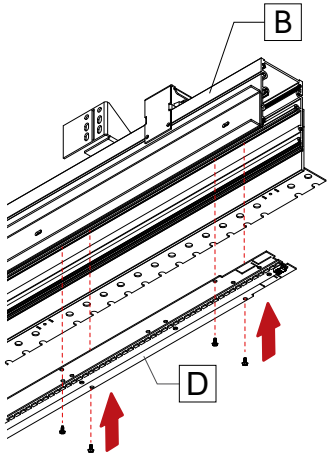

8 REINSTALL THE LENS.

Reinstall the lens **[C]** by bending it slightly and inserting it one side at a time.

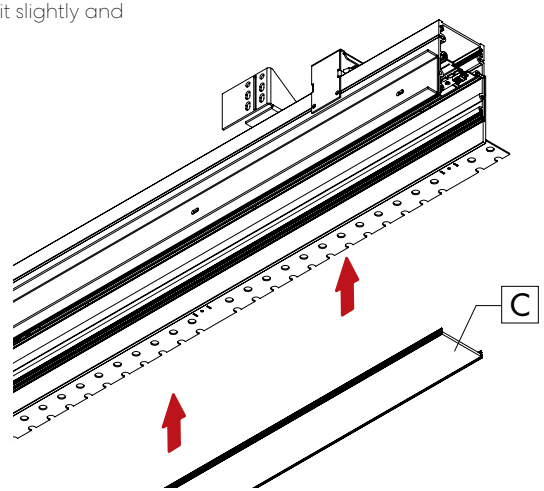

9 PLASTER & SAND SURFACE.

Plaster and sand over mud flanges to create a smooth finish. Once the mud is totally dry and painted, gently remove the cover.

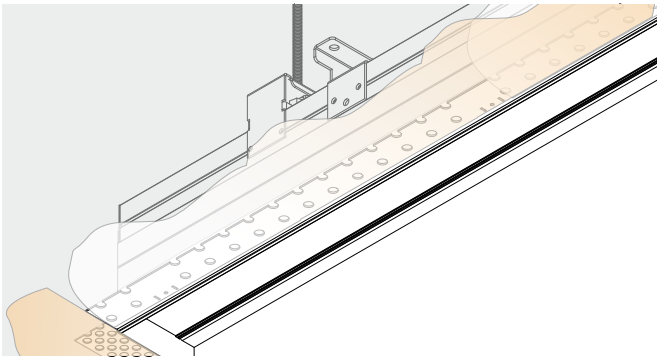

Intertek

www.lumenwerx.com (T) 514-225-4304 (F) 514-931-4862 © All rights are reserved to Lumenwerx ULC.
Lumenwerx ULC. reserves the right to change or modify product specifications without notification.

CURVIA PERIMETER
Drywall Mud Flange

CONTINUOUS RUN

1 FOR A CONTINUOUS RUN, FOLLOW STEPS **1 - 6** FROM THE SINGLE FIXTURE INSTRUCTIONS FOR THE FIRST FIXTURE IN THE RUN, THEN:

2 REMOVE THE JOINING SCREW.

From all fixtures in the run, unscrew and remove joining screws **[M]**. Keep them in a safe place.

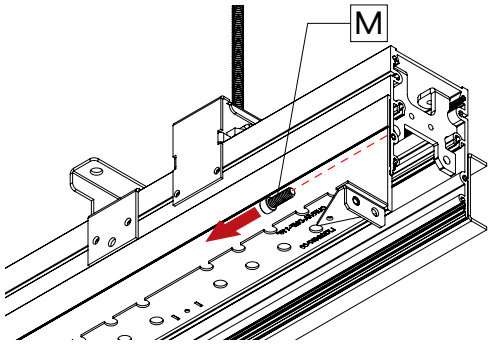

3 FOR THE SECOND FIXTURE IN THE RUN FOLLOW STEPS **2 - 6** FROM THE SINGLE FIXTURE INSTRUCTIONS, THEN:

4 MAKE ELECTRICAL CONNECTIONS.

Make the wire connection between the two sections using quick connectors **[O]**. Push wires inside the second fixture **[P]**.

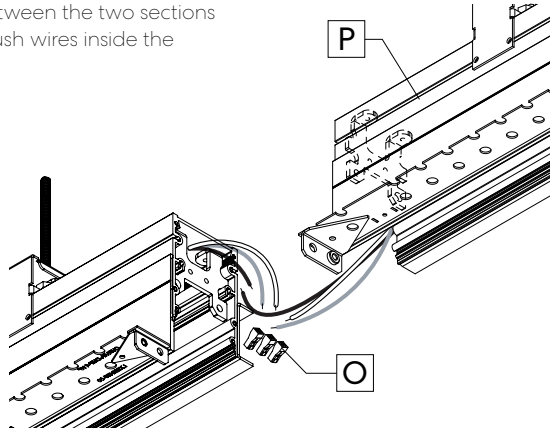

5 JOIN FIXTURES.

Join fixtures. Put the provided screws back in place. Make sure that no wires are placed in between the extrusions, preventing the fixtures to be joined. Tighten the screws to pull the sections together.

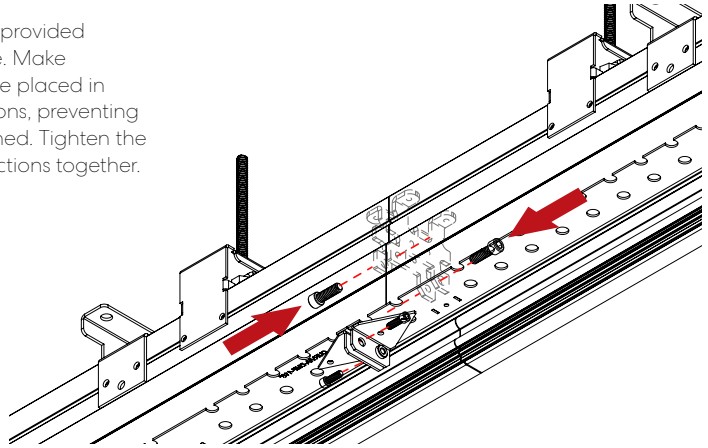

6 REPEAT STEPS **2 - 5** FROM THE CONTINUOUS RUN INSTRUCTIONS FOR ALL OTHER FIXTURES IN THE RUN.

7 FOLLOW STEPS **7 - 9** FROM THE SINGLE FIXTURE INSTRUCTIONS FOR ALL OTHER FIXTURES IN THE RUN.

Intertek

www.lumenwerx.com (T) 514-225-4304 (F) 514-931-4862 © All rights are reserved to Lumenwerx ULC.
Lumenwerx ULC. reserves the right to change or modify product specifications without notification.