FORMA TOTE PENDANT

DIRECT

Project: _____

Type: _____

DESCRIPTION

Timeless in appearance and flexible in function, the decorative Forma pendants embody the simple beauty of geometric design and the sophisticated power of innovative technology. The conical Caret, the truncated-cone-shaped Tote, and the hemisphere Cupola luminaires are each equipped with our Unity Pointed (UP) technology, which delivers lens brightness uniformity across all shapes and sizes within the same lumen output.

3737 Cote Vertu St-Laurent, Quebec, Canada H4R 2C9
T (514) 225-4304 F (514) 931 -4862
www.lumenwerx.com

Lumenwerx reserves the right to modify product specifications without notification.
© Lumenwerx, ULC. All rights reserved.

FORMA-TOTE-SW-TW-PENDANT-SPEC-REV4 November 30, 2023

FORMA TOTE PENDANT

DIRECT

Lumenwerx

Project: _____

Type: _____

Order Guide

LUMINAIRE ID	SIZE	DISTRIBUTION	DIRECT OPTIC	INDIRECT OPTIC Specify NA for Direct Fixture	LIGHT SOURCE
FTOTP			**HLO**		
FTOTP - Forma Tote Pendant	**8IN** - 8" diameter **12IN** - 12" diameter **24IN** - 24" diameter	**DI** [1] - Direct/Indirect **D** - Direct [1] Not available in 8" diameter.	**HLO** - High-Efficiency Lambertian Optic	**TIO** - Translucent Indirect Optic **NA** - Not applicable	**SW** - Static white **FS** - Full spectrum **BIOSST** - Static biologically-optimized lighting **BIOSDY** - Dynamic biologically-optimized lighting **SOLA** - Dim-to-warm single channel control 35K to 22K **DUO** - Tunable White 2-channel control 65K to 27K **RS** - Red solid **GS** - Green solid **BS** - Blue solid

CRI
Specify NA for Solid Color

80CRI [2] - 80 CRI
90CRI [2, 3] - 90 CRI
95CRI [4] - 95 CRI
NA - Not applicable

[2] Not available with full spectrum.
[3] Not available with BIOS.
[4] Only available with full spectrum.

DIRECT LUMEN PACKAGE

SW, SOLA, DUO

	Low	Medium	High [5]
8"	**x**	**500LM**	**700LM**
12"	**800LM**	**1200LM**	**1600LM**
24"	**3200LM**	**4800LM**	**6400LM**

[5] Not available with full spectrum or BIOS.

Solid Colors (RS, GS, BS)

8"	**6W**
12"	**14W**
24"	**57W**

INDIRECT LUMEN PACKAGE
Specify NA for Direct Fixture

SW, SOLA, DUO

	Low	Medium	High [6]
12"	**x**	**1200LM**	**1600LM**
24"	**3200LM**	**4800LM**	**6400LM**

[6] Not available with full spectrum or BIOS.

Solid Colors (RS, GS, BS)

12"	**6W**
24"	**14W**

NA - Not applicable

COLOR TEMPERATURE
Specify NA for Sola, Duo and Solid Color

27K [7] - 2700K
30K - 3000K
35K - 3500K
40K - 4000K
NA - Not applicable

[7] Not available with BIOS.

VOLTAGE

120V - 120V
277V - 277V
UNV - 120V-277V

DRIVER [8]

SW
D1 - 1% 0-10V
DA [9] - DALI
LDE1 [9] - Lutron Hi-lume 1% Eco
ELD1 - eldoLED 1% ECOdrive 0-10V
ELD0 - eldoLED 0.1% SOLOdrive 0-10V

SOLA
SD1 - Single 0-10V input

DUO
DDA [9] - DALI DT6
DDA8 [9] - DALI DT8
DD1 - Dual 0-10V input for CCT/intensity
PSQ0 [9] - Lutron T-Series 1% tunable white
RDMX [9] - Remote DMX

Soild Colors
D1 - 0-10V

[8] PoE (Power-over-Ethernet) compatible. Consult factory for details.
[9] On-site commissioning is required.

ELECTRICAL

1C - 1 circuit

MOUNTING [10]

ACS - Aircraft cable, standard
ACC( ) - Aircraft cable, custom

[10] See page 3 for ordering details.

BODY FINISH [11]

TMW - Textured matte white
TMB - Textured matte black
CF# - Custom finish, specify RAL#

[11] See page 4 for more finish options.

INNER TRIM FINISH [12]

TMW - Textured matte white
TMB - Textured matte black
CF# - Custom finish, specify RAL#

[12] See page 4 for more finish options.

Accessories
Optional, order separately

WALL CONTROLLER

DMX	DD1
WCW [11] - DMX wall controller white **WCB** [11] - DMX wall controller black [11] Available with DMX only. For more information, see pages 8 to 11, or consult factory.	**TWCW** [12] - Dual 0-10V wall controller white **TWCB** [12] - Dual 0-10V wall controller black [12] Available with DD1 only. For more information, see page 12, or consult factory.

3737 Cote Vertu St-Laurent, Quebec, Canada H4R 2C9
T (514) 225-4304 F (514) 931 -4862
www.lumenwerx.com

Lumenwerx reserves the right to modify product specifications without notification.
© Lumenwerx, ULC. All rights reserved.

FORMA-TOTE-SW-TW-PENDANT-SPEC-REV4 November 30, 2023

FORMA TOTE PENDANT

DIRECT

Pendant Mounting Code

Standard

For a standard mounting, please refer the information below.

MOUNTING
ACS - Aircraft cable, standard

Ø5" canopy
Canopy is white
Power cord is white for all fixture finishes (except black fixture is black power cord)
Aircraft cable length is 36"

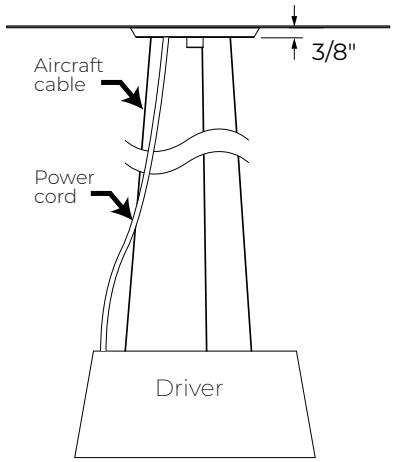

Custom

Aircraft Cable

For a custom mounting, specify the options in the parentheses.

Example: ACC(5PC-36IN-TMW-PCB)

MOUNTING
ACC( )

	CANOPY SIZE	AIRCRAFT CABLE LENGTH	CANOPY FINISH	POWER CORD COLOR
ACC	**5PC** - Ø 5" power canopy	**36IN** - 36" **72IN** - 72" **120IN** - 120" **#IN** [1] - Other lengths, specify in inches [1] Maximum length is 288". For longer lengths, please consult factory.	**TMW** - Textured matte white **TMB** - Textured matte black **CF#** - Custom finish, specify RAL#	**PCW** - White **PCB** - Black

3737 Cote Vertu St-Laurent, Quebec, Canada H4R 2C9
T (514) 225-4304 F (514) 931 -4862
www.lumenwerx.com

Lumenwerx reserves the right to modify product specifications without notification.
© Lumenwerx, ULC. All rights reserved.

FORMA-TOTE-SW-TW-PENDANT-SPEC-REV4 November 30, 2023

FORMA TOTE PENDANT

DIRECT

Fixture Finishes

Standard

TMW - Textured Matte White

TMB- Textured Matte Black

Custom

Neutrals

CRM - Cream

GRY - Gray

STG - Steel Gray

SAG - Sage Gray

MOG - Moss Gray

BLB - Black Blue

Designer

ALM - Almond

QRZ - Quartzite Texture

RST - Rust Fine Texture

GRB - Green Beige

YLW - Yellow

SLM - Salmon Pink

VIO - Pastel Violet

RED - Red

PRR - Purple Red

SMB - Storm Blue

DPB - Deep Blue

OCB - Ocean Blue

BLG - Blue Green

GNS - Green Smoke

MNG - Mint Green

LMG - Lime Green

Metallics

CHP - Champagne

GLD - Gold

DGD - Dark Gold

IRN - Iron Ore

CNY - Canyon

SBP - Sandblast Copper

SWD - Sandalwood

3737 Cote Vertu St-Laurent, Quebec, Canada H4R 2C9
T (514) 225-4304 F (514) 931 -4862
www.lumenwerx.com

Lumenwerx reserves the right to modify product specifications without notification.
© Lumenwerx, ULC. All rights reserved.

FORMA-TOTE-SW-TW-PENDANT-SPEC-REV4 November 30, 2023

FORMA TOTE PENDANT

DIRECT

Dimensions

Ø8"

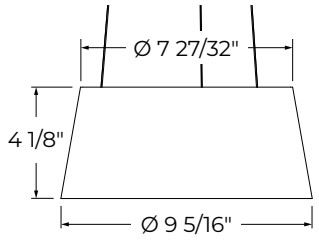

Ø12"

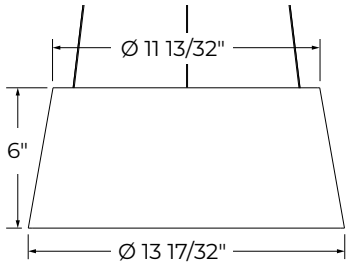

Ø24"

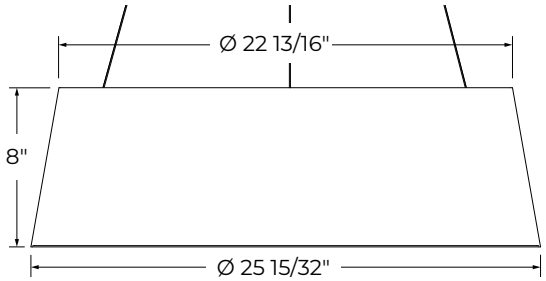

Photometrics

DIRECT OPTICS

Delivered Lumens at 35K at 80 CRI, with HLO lens option.

Ø8"

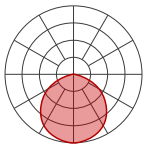

LED OUTPUT	DELIVERED LUMENS	INPUT WATTAGE	LPW
Medium output	500	6.2	80
High output	700	9	77

Ø12"

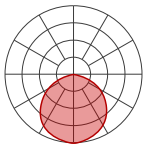

LED OUTPUT	DELIVERED LUMENS	INPUT WATTAGE	LPW
Low output	800	8.8	91
Medium output	1200	13.5	89
High output	1600	18.4	87

Ø24"

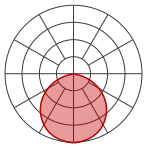

LED OUTPUT	DELIVERED LUMENS	INPUT WATTAGE	LPW
Low output	3200	34.5	93
Medium output	4800	53	91
High output	6400	72.2	89

INDIRECT OPTICS

Delivered Lumens at 35K at 80 CRI, with TIO lens option.

Ø12"

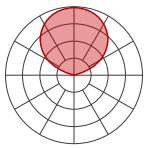

LED OUTPUT	DELIVERED LUMENS	INPUT WATTAGE	LPW
Medium output	1200	8.7	138
High output	1600	11.9	134

Ø24"

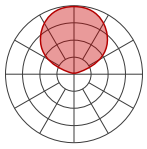

LED OUTPUT	DELIVERED LUMENS	INPUT WATTAGE	LPW
Low output	3200	21.1	152
Medium output	4800	33.1	145
High output	6400	46	139

MULTIPLIER TABLES

Use these tables to get results for different color temperatures and CRI.

Multiplier - CCT/CRI

CCT (K)	WATTS		LPW	
	CRI80	CRI90	CRI80	CRI90
2700	1.05	1.26	0.95	0.79
3000	1.01	1.23	0.99	0.81
3500	1.00	1.20	1.00	0.84
4000	1.00	1.17	1.00	0.85

DIRECT/INDIRECT - LPW CALCULATION

For Direct/Indirect performance values, follow the formula.

$$\frac{\left(\text{DIRECT DELIVERED LUMENS} + \text{INDIRECT DELIVERED LUMENS}\right)}{\left(\text{DIRECT INPUT WATTS} + \text{INDIRECT INPUT WATTS}\right)} = \text{LPW}$$

3737 Cote Vertu St-Laurent, Quebec, Canada H4R 2C9
T (514) 225-4304 F (514) 931 -4862
www.lumenwerx.com

Lumenwerx reserves the right to modify product specifications without notification.
© Lumenwerx, ULC. All rights reserved.

FORMA-TOTE-SW-TW-PENDANT-SPEC-REV4 November 30, 2023

Technical Specifications

DIRECT OPTIC

High-Efficiency Lambertian Optic (HLO)

Shielding of 0.1" thick, thermoformed diffusing acrylic with up to 70% transmission and excellent source obscuration. Vertical return edge illuminates inside of housing. Luminaire brightness is controlled by the flux-to-shielding area ratio.

INDIRECT OPTIC

Translucent Indirect Optic (TIO)

The Translucent Indirect Optic (TIO) is composed of a horizontal LED array that has a translucent lens to mask pixilation from the diodes.

LIGHT SOURCE- STATIC WHITE

Custom array of mid-flux LEDs are mounted directly to the housing for optimal thermal performance. Available in 2700K, 3000K, 3500K and 4000K with a minimum 80 CRI and an option for 90 CRI with elevated R9 value. Color consistency maintained to within 3 SDCM. LEDs operated at reduced drive current to optimize efficacy and lumen maintenance.

All LEDs have been tested in accordance with IESNA LM-80-08 and the results have shown L80 lumen maintenance greater than 60,000 hours. Absolute product photometry is measured and presented in accordance with IESNA LM-79, unless otherwise indicated. Optional full spectrum LEDs can be incorporated in the fixture to increase Cyanosis Observation Index (COI) and assist in regulating circadian rhythms.

BIOS SkyBlue™ Technology is designed to provide the specific circadian stimulus to improve overall sleep quality, recovery during the night, and overall feelings of well-being.

The non-visual light signals that stimulate our circadian system have peak intensity in the "sky blue" region. As the diagram below illustrates, BIOS SkyBlue technology shifts the peak LED spectral intensity (490 nm) to align better with the peak response of circadian stimulus. Also note the enhanced deep-red (near 660 nm) spectrum.

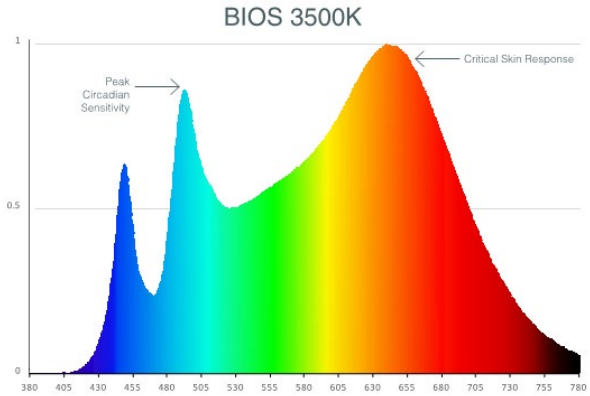

CHROMAWERX - TUNABLE WHITE

Chromawerx SOLA

Chromawerx SOLA is single-channel control that dims output while warming the color temperature in a pre-determined relationship. A simple analog control adjusts a specially populated LED array to emulate the effect of dimming a filament source.

Chromawerx DUO

Chromawerx DUO offers a two-channel control system which uses analog or digital protocols for synchronous control of both cool (6500K) to warm (2700K) LED arrays - maintaining a CRI above 90. The range of color DUO offers is useful for entraining circadian rhythms, stimulating alertness, and compensating for jet lag among other applications. The Chromawerx drivers are programmed to limit maximum light output and power usage across all color temperatures.

Chromawerx Solid colors

For dramatic coloration, Forma Tote offers Chromawerx options for solid colors like red, green, or blue. Consult Lumenwerx for implementations of Chromawerx Duo with white and solid color LEDs, enabling muted colors or the ability to switch between white and colored light.

RS - Red solid

BS - Blue solid

GS - Green solid

3737 Cote Vertu St-Laurent, Quebec, Canada H4R 2C9
T (514) 225-4304 F (514) 931 -4862
www.lumenwerx.com

Lumenwerx reserves the right to modify product specifications without notification.
© Lumenwerx, ULC. All rights reserved.

FORMA-TOTE-SW-TW-PENDANT-SPEC-REV4 November 30, 2023

ELECTRICAL

Factory-set, adjustable output current LED driver with universal (120-277VAC) input. Dimmable from 100% to 1% with 0-10V dimming control. Rated life (90% survivorship) of 50,000 hours at 50°C max. ambient (and70°C max. case) temperature. At maximum driver load: Efficiency>84%, PF>0.9, THD<20%. Other specifiable options include Lutron Hi-Lume 1% Eco, DMX (RDM compatible), eldoLED 1% ECOdrive, eldoLED 0.1% SOLOdrive, and DALI protocol drivers. All of our standard 0-10V drivers are NEMA 410 compliant.

PoE

Depending on the PoE manufacturer selected, Lumenwerx will install the node in factory as either integral to the luminaire, or as a remote module. Factory programming of the PoE node may or may not enable the following functionalities: lumen package, Duo (tunable white), emergency battery backup, and sensor integration. These must be addressed and evaluated on a case-by-case basis.

FINISH

Interior - 95% reflective, matte white powder coating.
Exterior - Standard powder-coat paint available in textured matte white and black. Custom colors are also available in over 30 colors.

CONSTRUCTION

Housing - Spun aluminum
Canopy - Spun sheet metal
Lens - Thermoformed acrylic

WEIGHT

8" - 3 lbs - 1.4 kg
12" - 6.7 lbs - 3 kg
24" - 19 lbs - 8.6 kg

CERTIFICATIONS

ETL - Rated for Indoor Dry/Damp locations. Conforms to UL Standard 1598 and certified to CAN/CSA Standard C22.2 No. 250.0.

WARRANTY

Lumenwerx provides a five-year limited warranty of electrical and mechanical performance of the luminaires, including the LED boards, drivers, and auxiliary electronics. Lumenwerx will repair or replace defective luminaires or components at our discretion, provided they have been installed and operated in accordance with our specifications. Other limitations apply, please refer to the full warranty on our website.

3737 Cote Vertu St-Laurent, Quebec, Canada H4R 2C9
T (514) 225-4304 F (514) 931 -4862
www.lumenwerx.com

Lumenwerx reserves the right to modify product specifications without notification.
© Lumenwerx, ULC. All rights reserved.

FORMA TOTE PENDANT

DIRECT

Lumenwerx

DUO DMX SPECIFICATION

A qualified DMX integrator is required to assure proper installation and commissioning of the DMX network. **When placing the PO, please provide the contact information of your DMX integrator.**

Please answer the following questions to help us identify your DMX network requirements.

Do you require a wall controller provided by Lumenwerx?

YES → DMX controller supplied by Lumenwerx

NO → DMX control system supplied by others. Lumenwerx will supply DMX-enabled fixtures with default DMX addressing.
See following pages for technical DMX informations. ✓

How many zones do you have?
A zone consists of one or more luminaires behaving identically.

1 Zone | **2 Zones**

1 - 4 Zones

Do you have more than 32 drivers in total?

NO → Order a standard Lumenwerx wall controller.

WALL CONTROLLER
WCW - wall controller white **WCB** - wall controller black

Add the control code at the end of your order code.
Please provide a fixture layout or RCP (Reflected Ceiling Plan) showing the locations of the DMX fixtures, zones and the DMX wall controller.
Refer to your DMX integrator for the installation. ✓

YES → Subject to factory evaluation. Please contact our controls specialist at controls@lumenwerx.com
Additional costs and equipment will be required. ✓

5 or more Zones

Subject to factory evaluation and approval. Please contact our controls specialist at controls@lumenwerx.com
Additional costs and equipment will be required. ✓

To Calculate # of drivers

How to calculate the required number of drivers:

Per fixture

1 x Driver	50W per side

3737 Cote Vertu St-Laurent, Quebec, Canada H4R 2C9
T (514) 225-4304 F (514) 931 -4862
www.lumenwerx.com

Lumenwerx reserves the right to modify product specifications without notification.
© Lumenwerx, ULC. All rights reserved.

FORMA-TOTE-SW-TW-PENDANT-SPEC-REV4 November 30, 2023

FORMA TOTE PENDANT

DIRECT

GENERIC DMX NETWORK ARCHITECTURE

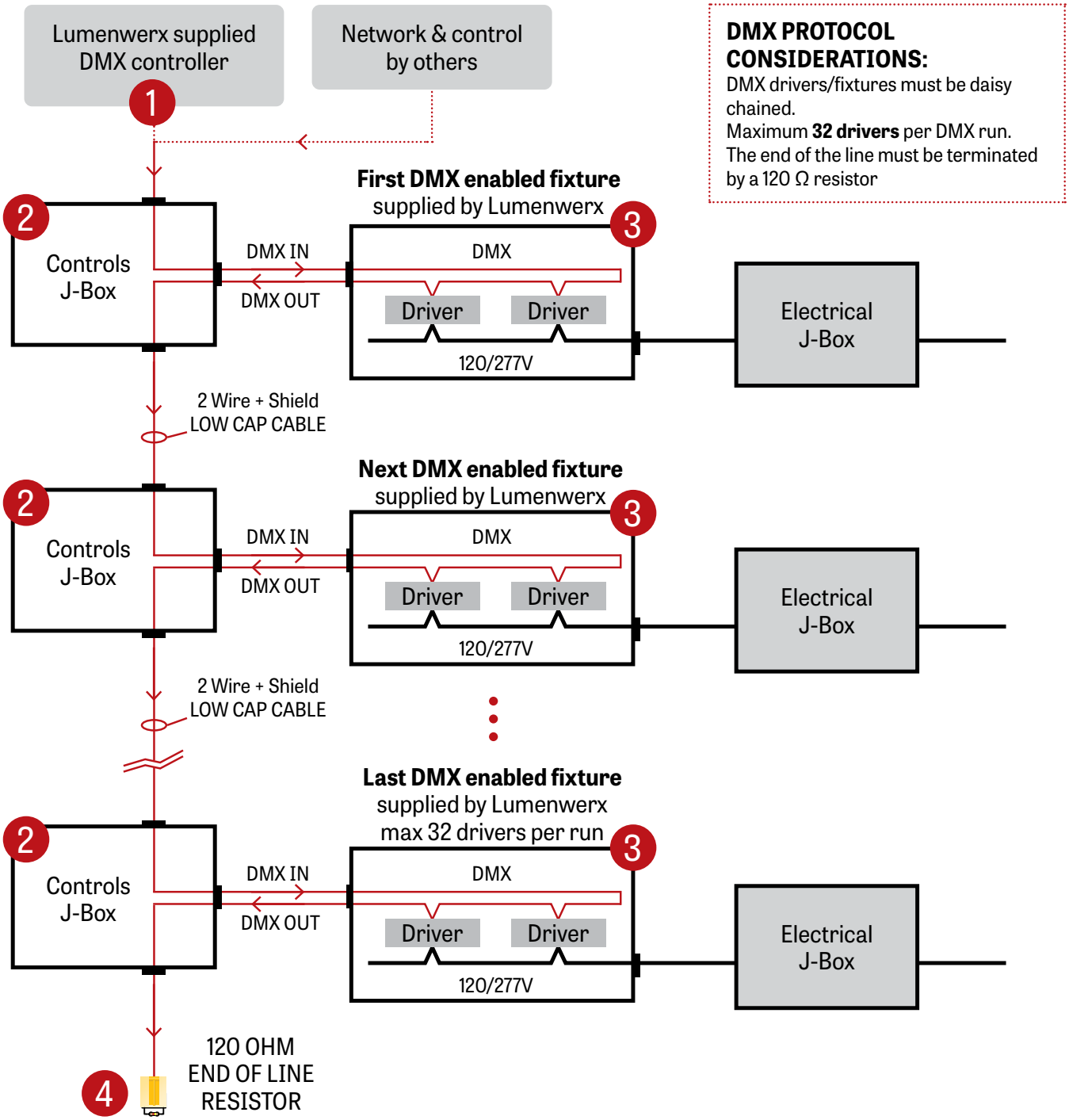

DMX PROTOCOL CONSIDERATIONS:
DMX drivers/fixtures must be daisy chained.
Maximum **32 drivers** per DMX run.
The end of the line must be terminated by a 120 Ω resistor

3737 Cote Vertu St-Laurent, Quebec, Canada H4R 2C9
T (514) 225-4304 F (514) 931 -4862
www.lumenwerx.com

Lumenwerx reserves the right to modify product specifications without notification.
© Lumenwerx, ULC. All rights reserved.

FORMA-TOTE-SW-TW-PENDANT-SPEC-REV4 November 30, 2023

FORMA TOTE PENDANT

DIRECT

DMX WALL CONTROLLER - TUNABLE WHITE

Default DMX Addresses:

1. WARM | 2. COOL

DUO 1-4 ZONE

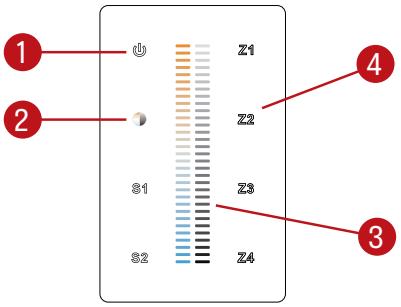

(1) Power:	Use this button to turn ON or OFF the fixture.
(2) Brightness/CCT:	Use the color/brightness toggle button to chose between color/brightness. When blue: brightness is selected; when yellow: color is selected.
(3) Slider:	Depending on the mode chosen in 2, the slider will allow the user to set desired color or brightness.
(4) Zone select:	Up to 4 zones can be selected, either independently or together. Once selected, the commands will be sent to the zone identified by a Blue LED.

1 LUMENWERX SUPPLIED DMX CONTROLLER

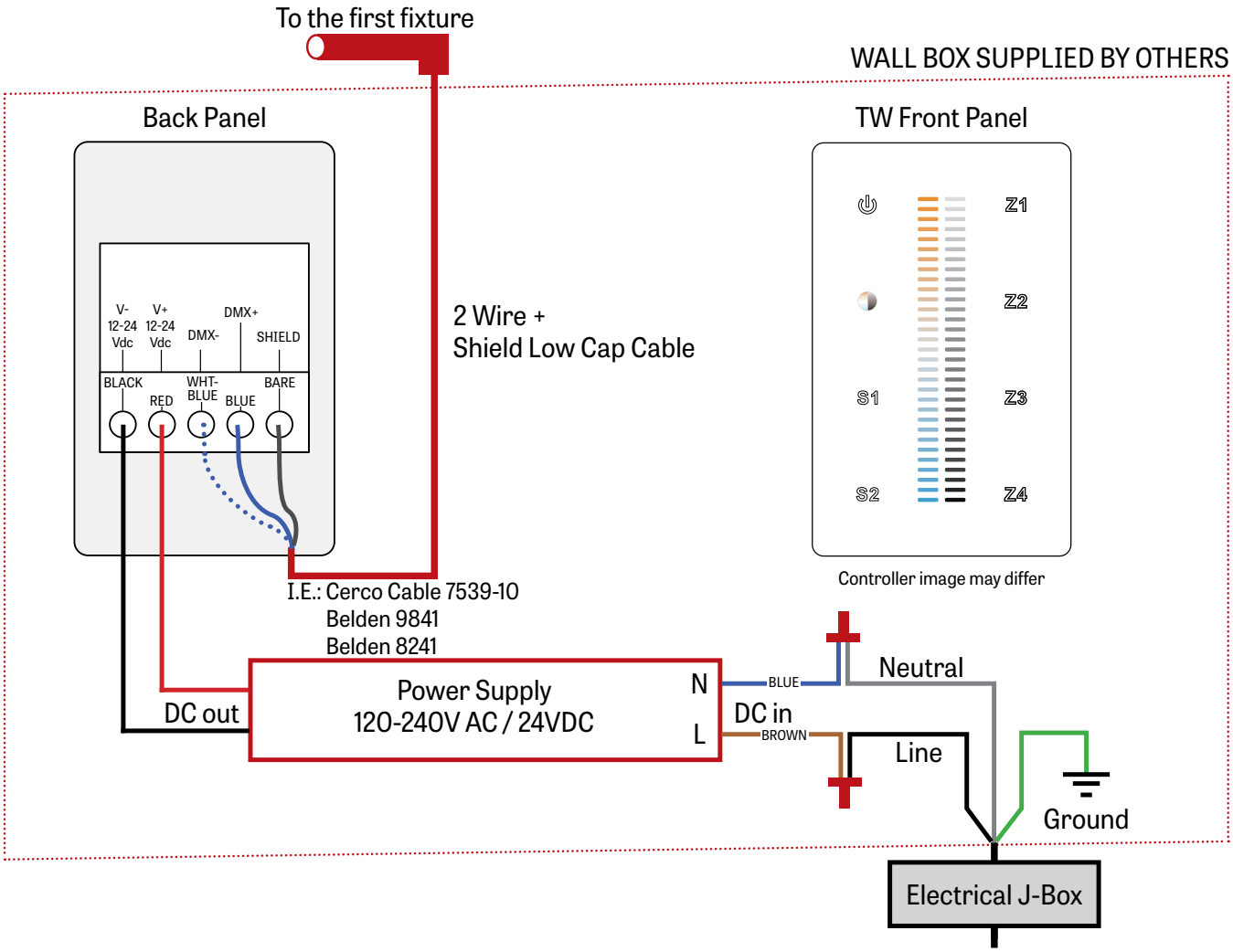

3737 Cote Vertu St-Laurent, Quebec, Canada H4R 2C9
T (514) 225-4304 F (514) 931 -4862
www.lumenwerx.com

Lumenwerx reserves the right to modify product specifications without notification.
© Lumenwerx, ULC. All rights reserved.

FORMA-TOTE-SW-TW-PENDANT-SPEC-REV4 November 30, 2023

2 J-BOX DMX DAISY CHAIN DETAIL

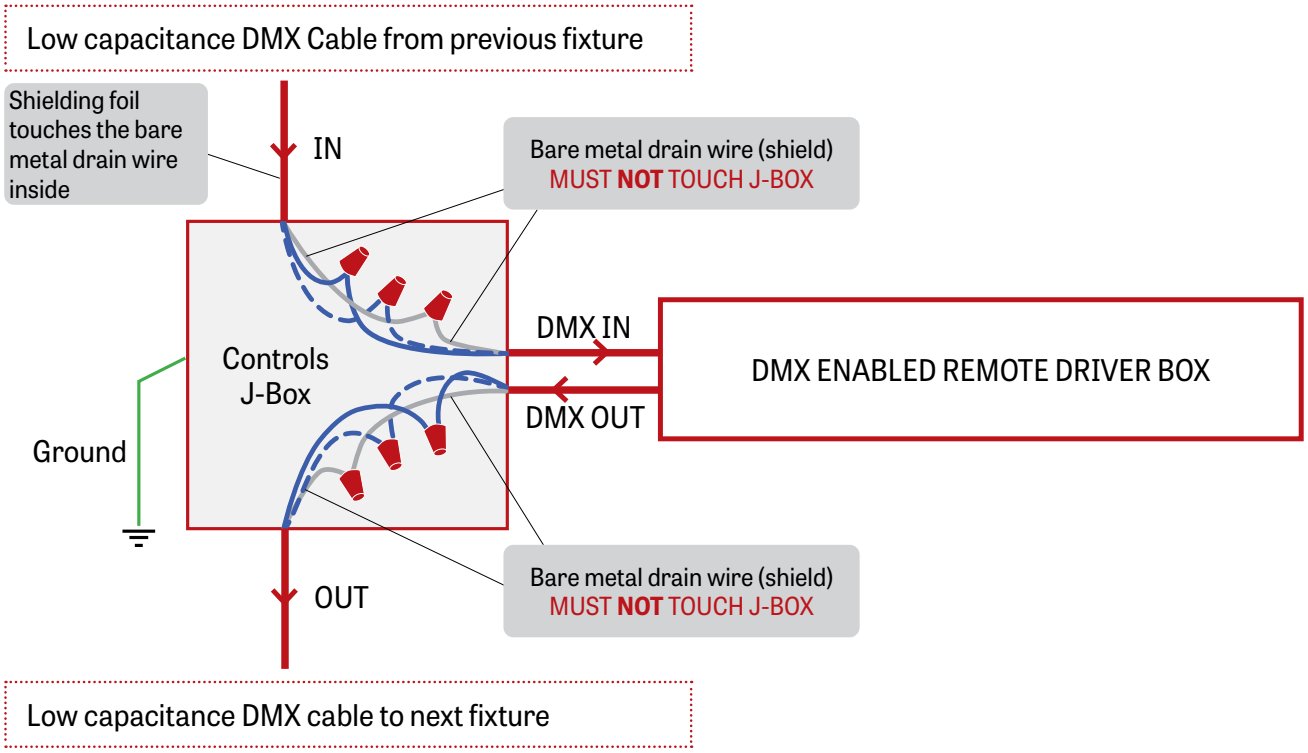

3 DMX CONNECTION PENDANT & WALL REMOTE DRIVER

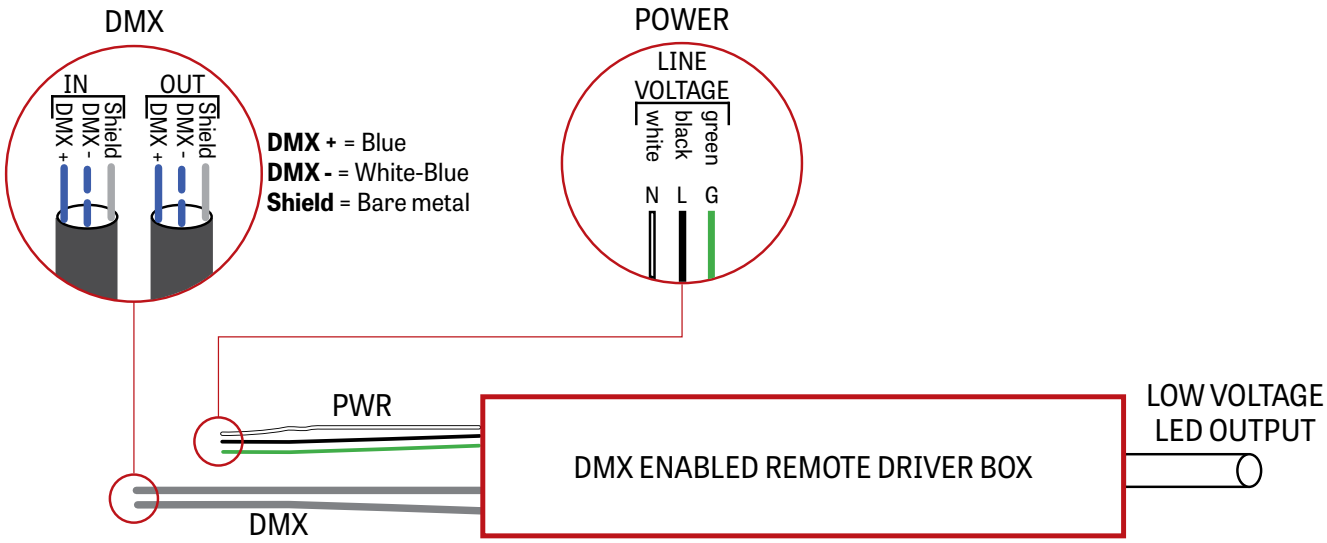

3737 Cote Vertu St-Laurent, Quebec, Canada H4R 2C9
T (514) 225-4304 F (514) 931 -4862
www.lumenwerx.com

Lumenwerx reserves the right to modify product specifications without notification.
© Lumenwerx, ULC. All rights reserved.

FORMA-TOTE-SW-TW-PENDANT-SPEC-REV4 November 30, 2023

FORMA TOTE PENDANT

DIRECT

DUAL 0-10V WALL CONTROLLER

Front Panel

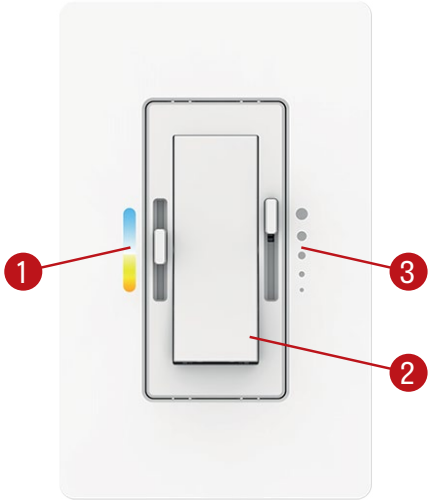

Controller image may differ

Dimensions

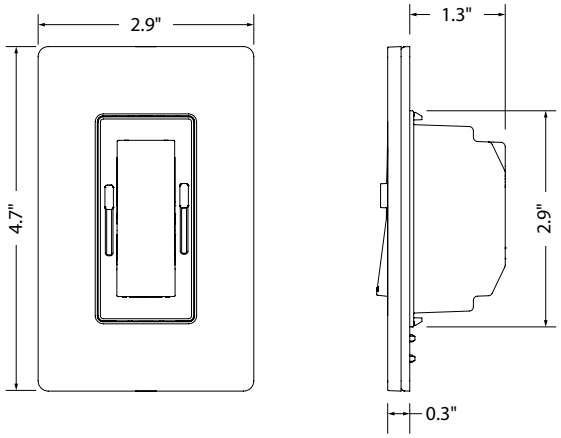

(1) CCT control: Use this button to adjust the color temperature.

(2) On/Off switch: Use this button to turn ON or OFF the fixture.

(3) Dimming control: Use this button to adjust the brightness.

Wiring Diagram

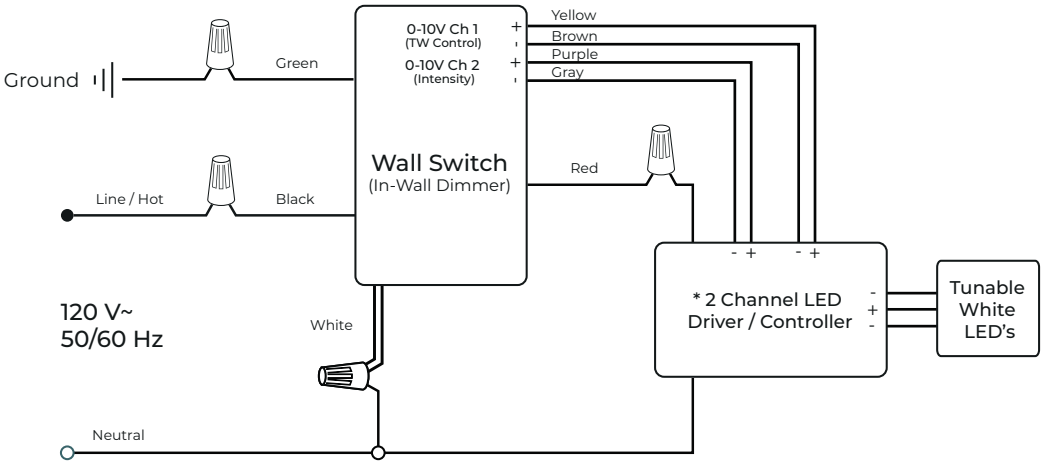

3737 Cote Vertu St-Laurent, Quebec, Canada H4R 2C9
T (514) 225-4304 F (514) 931 -4862
www.lumenwerx.com

Lumenwerx reserves the right to modify product specifications without notification.
© Lumenwerx, ULC. All rights reserved.

FORMA-TOTE-SW-TW-PENDANT-SPEC-REV4 November 30, 2023