VIA 1.5 - PATTERNS

RECESSED

LUMENWERX
WWW.LUMENWERX.COM

CHROMAWERX QUADRO - RGBW

IMPORTANT: a qualified DMX integration consultant is required to ensure proper installation and function of any DMX network

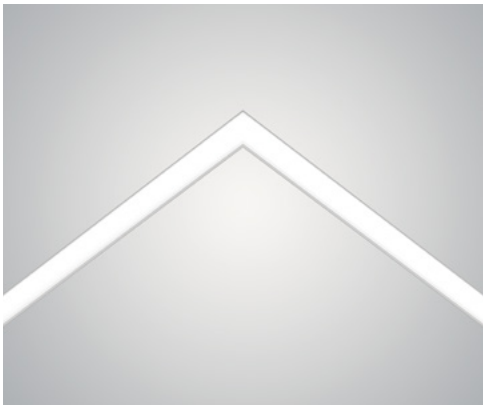

LEV - leveled corner

DESCRIPTION

At LumenWerx, we make it simple to design patterns customized for you. Whether surface, wall mount, pendant or recessed - or even a combination of different mounting types, we make it easy to achieve the results you're looking for. While our standard is a 90° corner, we can customize angles to suit your needs. Efficient and flexible, the Via 1.5 features numerous optical configurations including flush, and drop diffusers. Via 1.5 is an ideal vehicle for ChromaWerx color tuning in education, office, and healthcare applications where modular luminaires are used.

PROJECT: _____

TYPE: _____

NOTES: _____

CHROMAWERX

ORDER GUIDE

IC RATED

VIA1.5RPAT	HLO		LED		
LUMINAIRE ID	**OPTICS**	**LENS POSITION**	**LIGHT SOURCE**	**CHROMAWERX**	**OUTPUT WATTAGE**
VIA1.5RPAT - via 1.5" recessed pattern	**HLO** - High-Efficiency Lambertian Optic	**FH** - Flush **0.5D** - 0.5" drop **1.5D** - 1.5" drop	**LED** - high performance LED	**QUADRO** - four-channel RGB with 3500K white **RS** - red solid **GS** - green solid **BS** - blue solid	**2.5WF** - 2.5 w/ft output (for solid colors only) **3WF** - 3 w/ft output (quadro only) **6WF** - 6 w/ft output (quadro only) **9WF** - 9 w/ft output (quadro only)

	LEV				1
PATTERN LENGTH	**CORNER TYPE**	**CORNERS DEGREE**	**VOLTAGE**	**DRIVER**	**ELECTRICAL**
#FT - nominal length in feet **(2' increments only)** Continuous Run - for luminaires over 12'	**LEV** - leveled corner	**90** - 90 degrees **#** - other degrees	**120** - 120V **277** - 277V	**DMX** - to specify see pages 5 to 10 **DA** - Dali (solid colors only) local on-site commissioning is required **0-10** - 0-10 (solid colors only)	**1** - 1 circuit

MOUNTING CEILING	**MOUNTING WALL**	**FINISH**	**OPTIONS**
DTR - drywall trim **DTL** - drywall trimless **DMF** - drywall mud flange **NA** - not applicable	**DTR** - drywall trim **DTL** - drywall trimless **DMF** - drywall mud flange **NA** - not applicable	**W** - matte white **CF#** - custom finish specify RAL#	**FU** - fuse **FWC** - flexible whip cable (6' std) **CP** - Chicago Plenum **CU** - custom

DMX WALL CONTROLS
To specify see pages 5 to 10

See page 2 for ordering code detailed information

CROSS SECTION

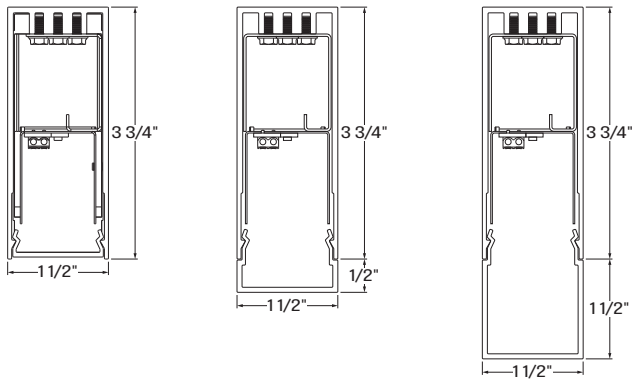

VIA1.5RPAT - HLO-FH **VIA1.5RPAT** - HLO-0.5D **VIA1.5RPAT** - HLO-1.5D

3D VIEW

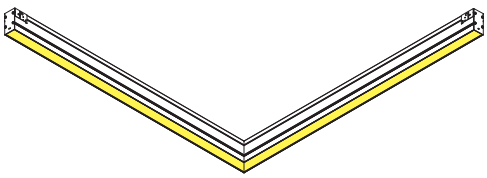

LEV - leveled corner

CHROMAWERX QUADRO - RGBW

LEVELED CORNER - DRYWALL

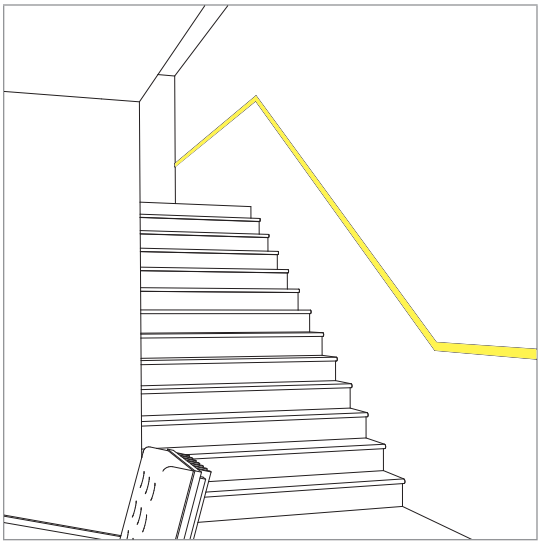

HOW TO SPECIFY A PATTERN?

Please follow these steps when specifying in order to be as precise as possible.

(1) We require a drawing illustrating the pattern you are trying to achieve - anything from a simple line drawing to elaborate architectural drawings will suffice.

(2) Under PATTERN LENGTH, enter the overall length of your pattern - either in feet or inches.

(3) Under CORNER TYPE, please enter the type (or types) of corner you require. If more than one type of corner is required, please separate types with a plus (+).

(4) Under CORNERS DEGREE, please enter the angle in degrees of each corner required to complete your pattern (for example 90+90+90).

	LEV	
PATTERN LENGTH	**CORNER TYPE**	**CORNERS DEGREE**
#FT - nominal length in feet **(2' increments only)** Continuous Run - for luminaires over 12'	**LEV** - leveled corner	**90** - 90 degrees **#** - other degrees

CHROMAWERX QUADRO - RGBW

OPTICS

High Efficiency Lambertian Optic (HLO) shielding of diffusing 0.075" thick acrylic provides up to 88% transmission and good source obscuration. Matte white reflectors distribute LED output across the shielding. Luminaire brightness is controlled by the ratio of luminous flux to shielding area. HLO is available as a flush diffuser or as a drop diffuser, extending 0.5" or 1.5" below the luminaire housing. Drop diffusers are extruded with glued end caps. HLO optics have a Spacing Criteria of 1.12.

LIGHT SOURCE - LED

Custom linear array of mid-flux LEDs, comprised of an alternation of an RGB and a dedicated white LED. The white LED is used for when a static white CCT is required in the space. RGB LEDs are tightly binned for excellent color control between fixtures. The white LEDs have been tested in accordance with IESNA LM-80-08 and the results have shown L80 lumen maintenance greater than 60,000 hours. Absolute product photometry is measured and presented in accordance with IESNA LM-79, unless otherwise indicated.

PATTERN LENGTH

All individual sections are joined together onsite using the joiner kits provided. LumenWerx offers joiner kits that are extremely simple to work with in the field and result in a fixture that appears virtually seamless with no light leak at any connection.

Joining system for flush

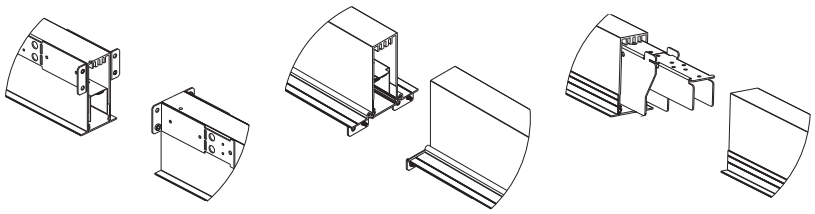

T-bar | Mud flange | Trim & Trimless

Joining system for drop lens

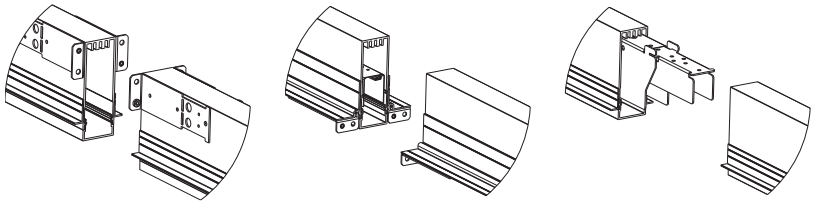

T-bar | Mud flange | Trim & Trimless

CHROMAWERX - RGBW

ChromaWerx Quadro is a four-channel control that operates an RGBW LED array and addresses the need for more expressive color in architectural applications. The DMX driver supports familiar programming tools for both dynamic multi-hued color and precise white color point control. While a typical user interface will be a DMX controller by others, LumenWerx also offers a simple control station for stand-alone color changing applications.

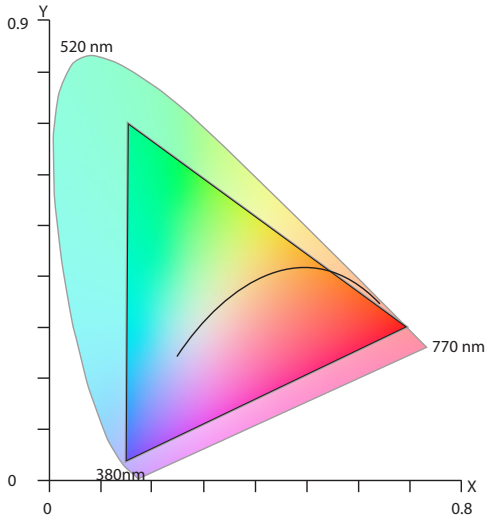

CIE 1931 Chromaticity space

The above diagram overlays the full gamut of colors attainable with the RGBW on top of the CIE 1931 color space. Any color point inside of the triangle can be obtained by setting the correct output levels for each of the individual red, green, blue, and white channels.

ELECTRICAL

DMX

Factory-set, adjustable output current, multi-channel LED driver with universal (120-277VAC) input. Using DMX wall controls (optionally supplied by LumenWerx) or an existing DMX control system, four channels of LEDs (Red/Green/Blue/White) are independently adjustable. Each DMX driver has multiple output channels that can be independently addressed at the factory or on-site using built-in RDM (Remote Device Management) functionality. Dimming range from 100%-0%. At maximum driver load, efficiency<89%, PF>0.9, THD<20%.

CHROMAWERX QUADRO - RGBW

MOUNTING OPTIONS

Mounting Ceiling

Mounting for drywall ceilings are available with visible trim, mud flange trim or trimless

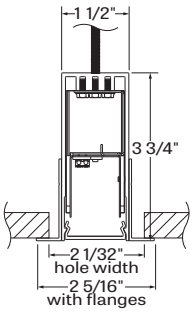

DTR - drywall trim

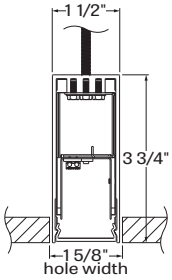

DTL - drywall trimless

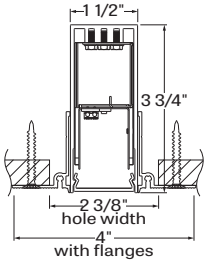

DMF - drywall mud flange

Mounting Wall

Recessed Wall Mounting for drywall is available with visible trim, mud flange trim or trimless

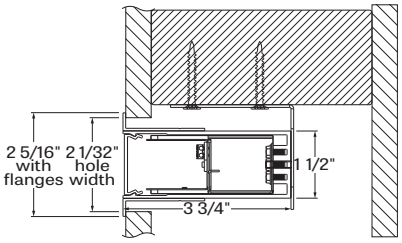

DTR - drywall trim

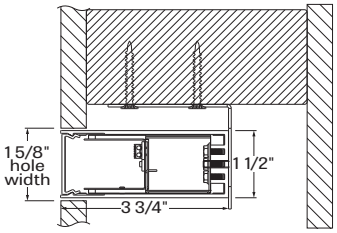

DTL - drywall trimless

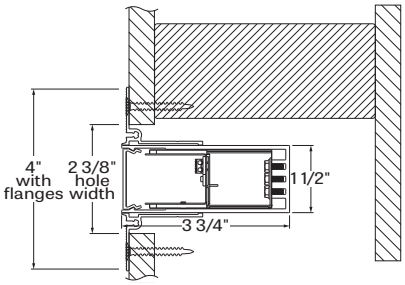

DMF - drywall mud flange

FINISH

Interior - 95%, reflective matte powder coated white paint

Exterior - matte white or aluminum powder coating.

Custom finishes are also available.

CONSTRUCTION

Housing - Extruded Aluminum (0.095" nominal) up to 90% Recycled Content

Interior brackets - Die formed cold rolled sheet steel 18 gauge thick

Joining system - Die cast Zinc (0.95" nominal) and die Formed galvanized sheet 18 gauge

Reflectors - Cold rolled steel 0.024" thick precisely die formed, 95% reflective matte white painted

Recessed flanges - Extruded Aluminum (0.075" nominal) up to 90% Recycled Content

Mud flange - Extruded Aluminum (0.075" nominal) up to 90% Recycled Content

Slip-through bracket - Die Formed galvanized sheet 18 gauge

End plate - Die formed cold rolled sheet steel 18 gauge thick

CERTIFICATIONS

ETL - Rated for Indoor Dry/Damp locations. Conforms to UL Standard 1598 and certified to CAN/CSA Standard C22.2 No. 250.0.

Chicago plenum - City of Chicago Approved (CCEA)

IC rated - suitable for direct contact with insulation.

WARRANTY

For all ChromaWerx products, LumenWerx provides a three-year limited warranty of electrical and mechanical performance of the luminaires, including the LED boards, drivers, and auxiliary electronics. LumenWerx will repair or replace defective luminaires or components at our discretion, provided they have been installed and operated in accordance with our specifications. Other limitations apply, please refer to the full warranty on our website.

Wall controllers are covered by the manufacturer warranty.

VIA 1.5 - PATTERNS

RECESSED

LUMENWERX
WWW.LUMENWERX.COM

CHROMAWERX QUADRO - RGBW

QUADRO DMX SPECIFICATION

A qualified DMX integrator is required to assure proper installation and commissioning of the DMX network. **When placing the PO, please provide the contact information of your DMX integrator.**

Please answer the following questions to help us identify your DMX network requirements.

Do you require a wall controller provided by Lumenwerx?

YES → DMX controller supplied by Lumenwerx

NO → DMX control system supplied by others. Lumenwerx will supply DMX-enabled fixtures with default DMX addressing.
See following pages for technical DMX informations. ✓

How many zones do you have?
A zone consists of one or more luminaires behaving identically.

How to calculate the required number of drivers:

per 4' fixture	per 4' fixture
Driver 1x driver	Driver Driver 2x driver
Less than 12.5W/ft, direct only	Above 12.5W/ft or for all direct/indirect fixture

To Calculate # of drivers

1 Zone | **2 to 3 Zones** | **4 or more Zones**

Do you have more than 32 drivers in total?

NO →

Order a standard Lumenwerx wall controller type 1.

WALL CONTROLLER

WC1W - wall controller 1 white
WC1B - wall controller 1 black

Add the control code at the end of your order code.
Please provide a fixture layout or RCP (Reflected Ceiling Plan) showing the locations of the DMX fixtures, zones and the DMX wall controller.
Refer to your DMX integrator for the installation. ✓

YES →

Subject to factory evaluation. Please contact our controls specialist at controls@lumenwerx.com
Additional cost and equipment will be required. ✓

NO →

Order a standard Lumenwerx wall controller type 2.

WALL CONTROLLER

WC2W - wall controller 2 white
WC2B - wall controller 2 black

Add the control code at the end of your order code.
Please provide a fixture layout or RCP (Reflected Ceiling Plan) showing the locations of the DMX fixtures, zones and the DMX wall controller.
Refer to your DMX integrator for the installation. ✓

YES →

Subject to factory evaluation. Please contact our controls specialist at controls@lumenwerx.com
Additional cost and equipment will be required. ✓

Subject to factory evaluation ans approval. Please contact our controls specialist at controls@lumenwerx.com
Additional cost and equipment will be required. ✓

Intertek

CHROMAWERX QUADRO - RGBW

GENERIC DMX NETWORK ARCHITECTURE

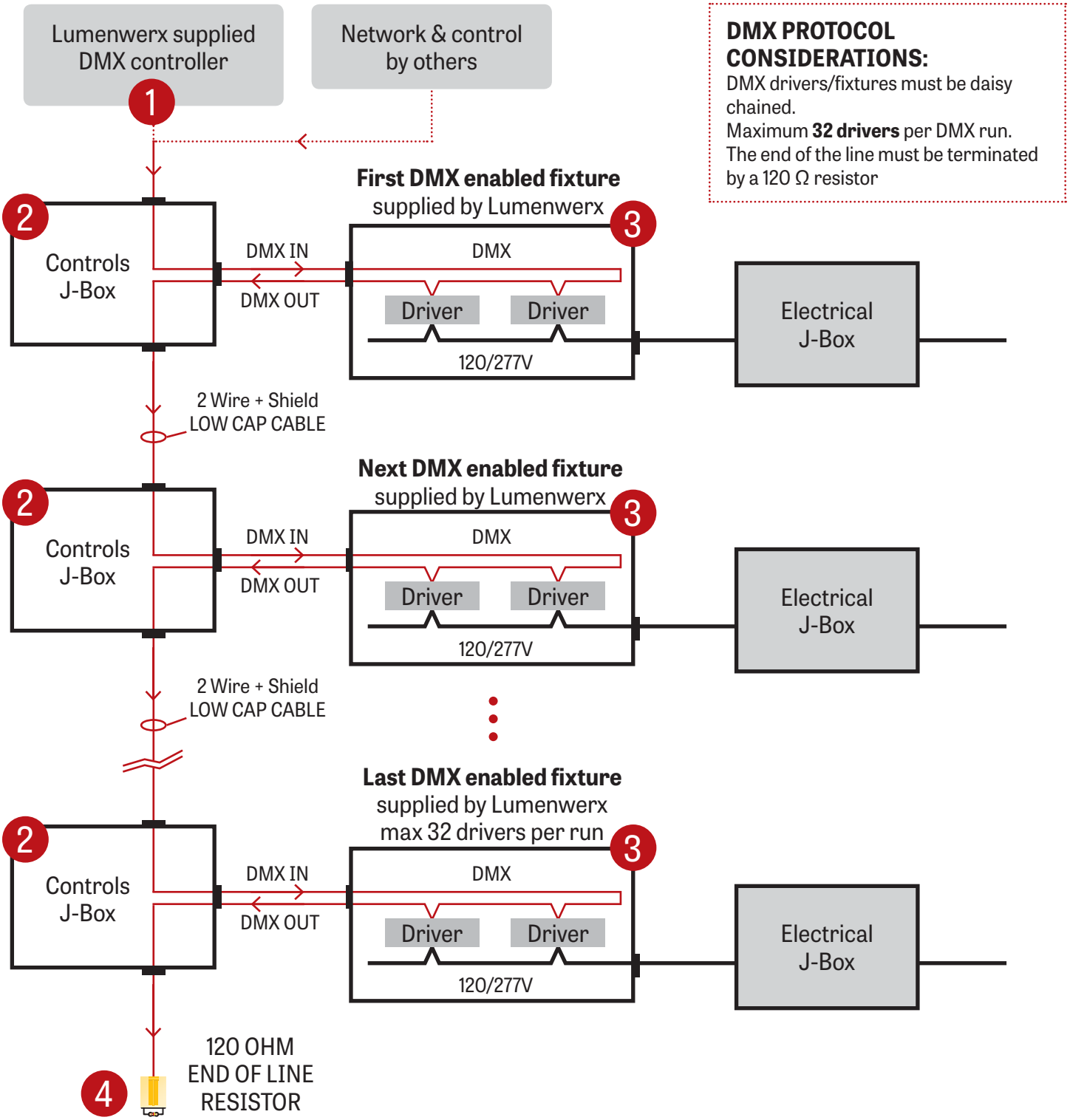

DMX PROTOCOL CONSIDERATIONS:
DMX drivers/fixtures must be daisy chained.
Maximum **32 drivers** per DMX run.
The end of the line must be terminated by a 120 Ω resistor

CHROMAWERX QUADRO - RGBW

1 LUMENWERX SUPPLIED DMX CONTROLLER

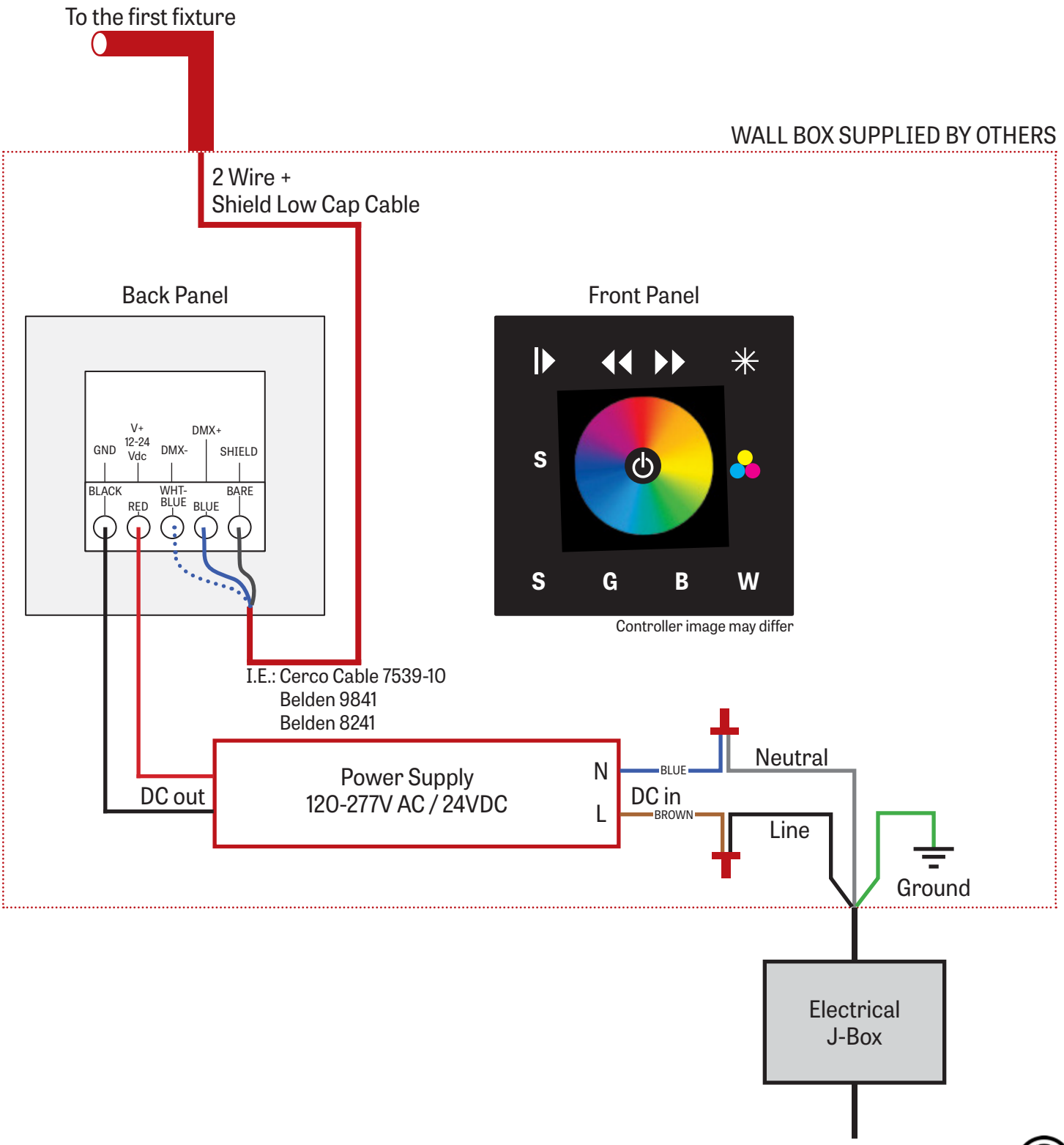

CHROMAWERX QUADRO - RGBW

2 J-BOX DMX DAISY CHAIN DETAIL

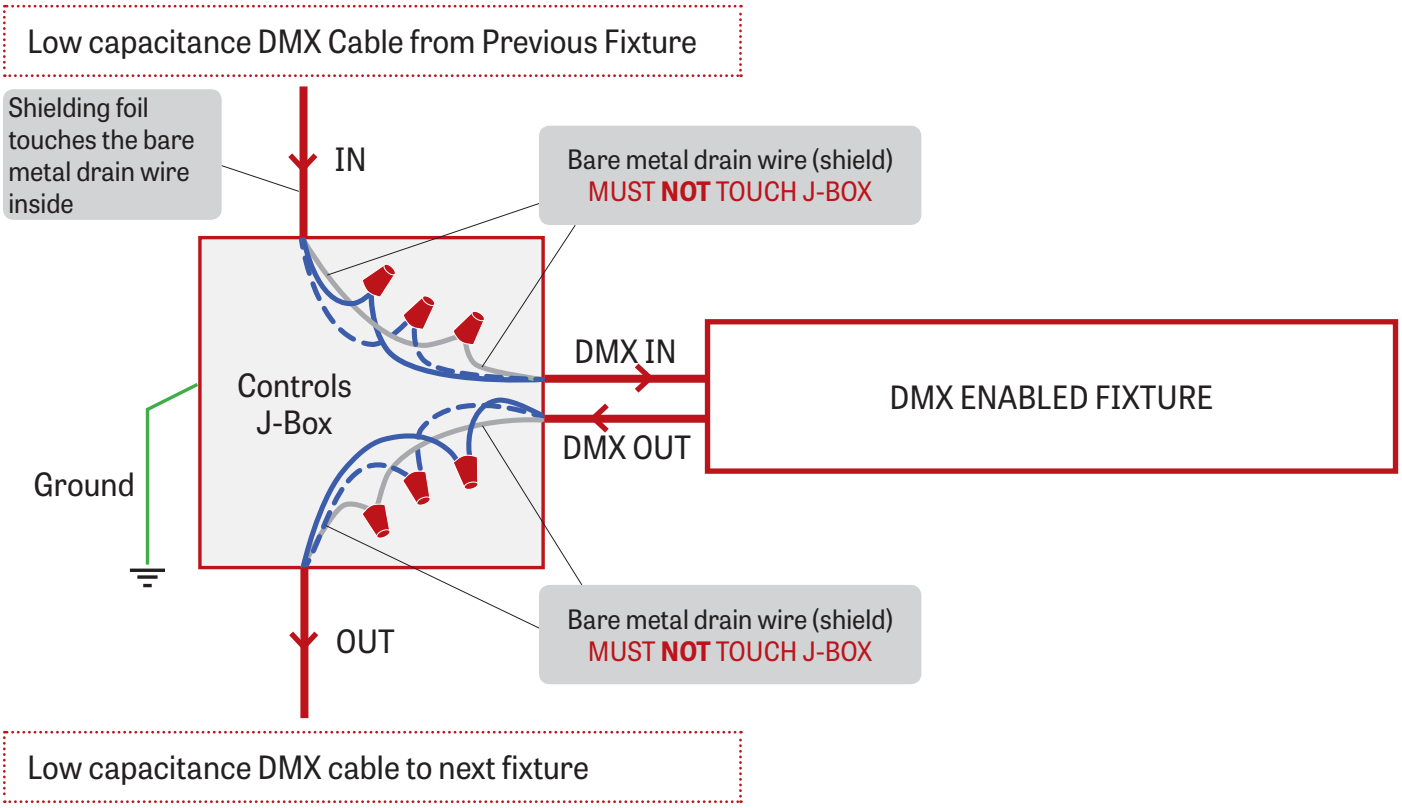

3 DMX CONNECTION RECESSED & SURFACE

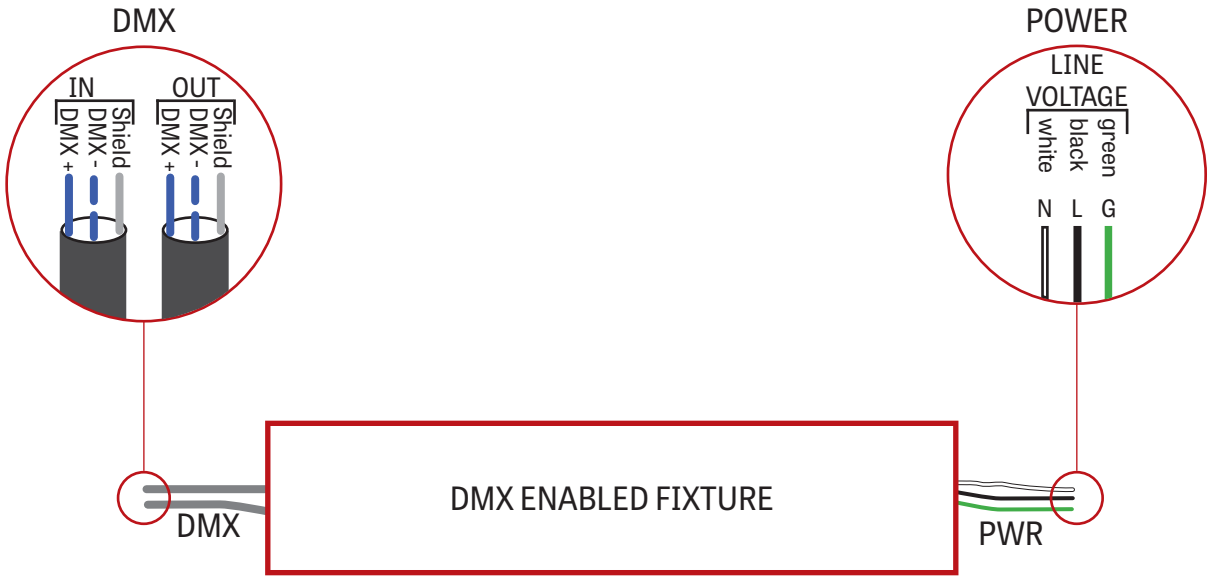

CHROMAWERX QUADRO - RGBW

4 DMX LAST FIXTURE DETAIL

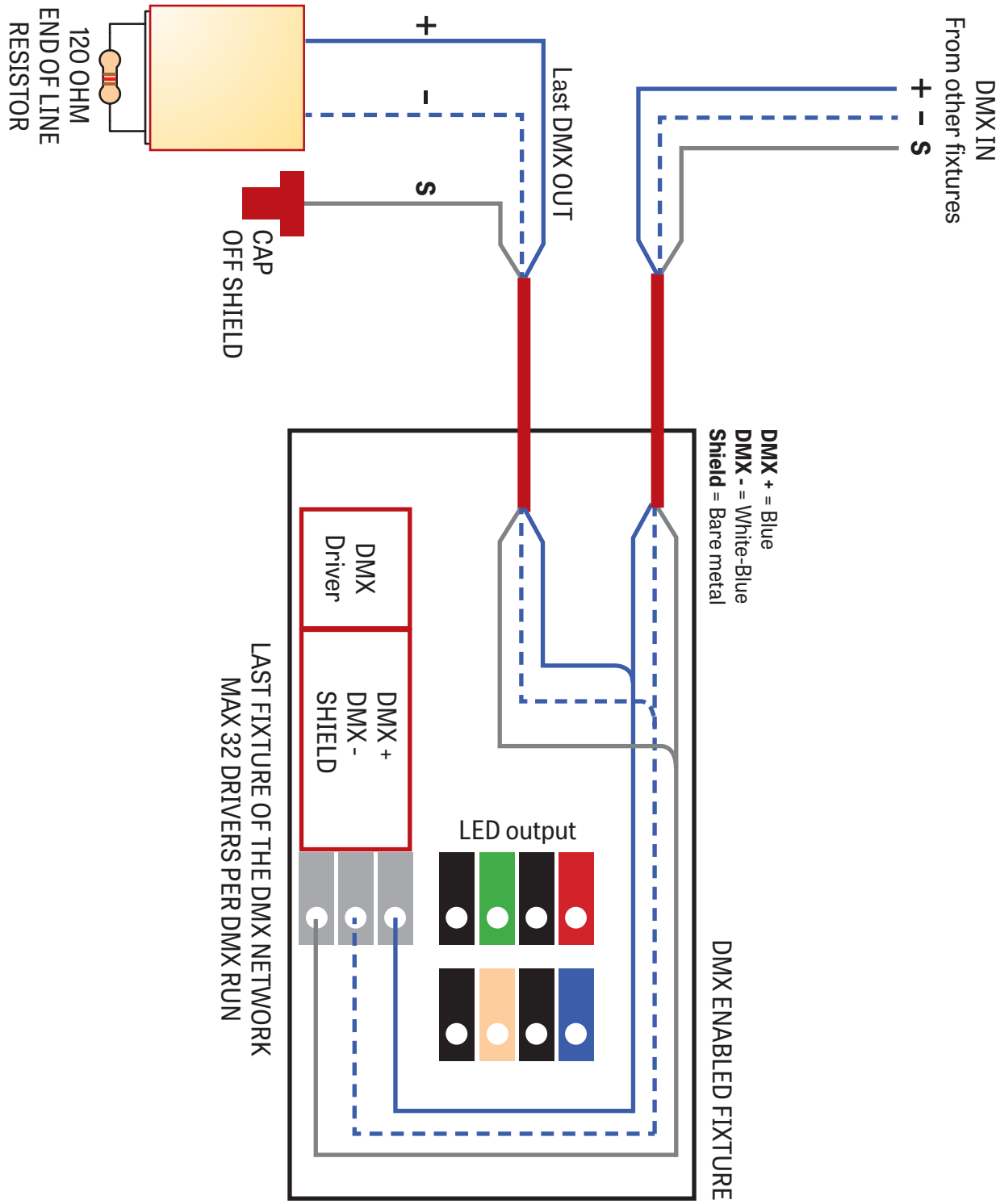

CHROMAWERX QUADRO - RGBW

DMX WALL CONTROLLER

WC1

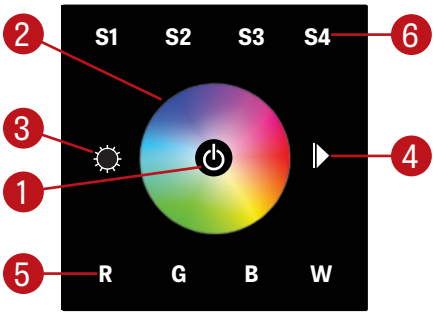

(1) Power:	Use this button to turn ON or OFF the RGBW fixture
(2) Color Wheel:	The wheel is used to rapidly select a color
(3) Brightness (RGB):	Hold down this button to either increase or decrease the brightness of the current RGB selection. White will not be affected by the RGB brightness button.
(4) Color Cycle:	This button will start an animation, rotating between Reds Greens and Blues, the arrows allows the user to speed up or slow down the animation
(5) Individual Colors:	By pressing and holding a color it will be possible to brighten or dim it. Quickly pressing a color will turn it OFF or turn it ON to it's previous dim level. White: In Order to activate or deactivate and dim the White channel, the White button needs to be used.
(6) Scenes:	By holding down one of the scenes button, the current color selection is saved. It can be later accessed by quickly pressing on one of the Scene buttons.

WC2

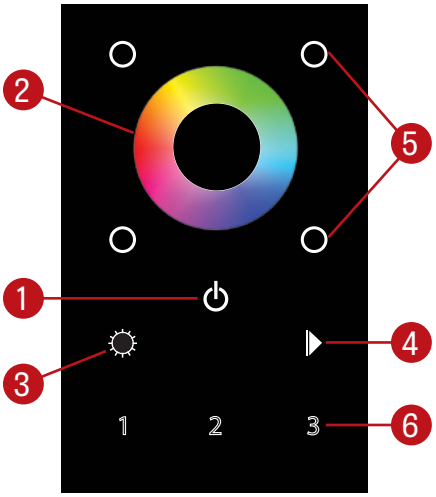

(1) Power:	Use this button to turn ON or OFF the RGBW fixture
(2) Color Wheel:	The wheel is used to rapidly select a color
(3) Brightness:	Hold down this button to either increase or decrease the brightness of the current RGB selection. White will not be affected by the RGB brightness button.
(4) Color Cycle:	This button will start an animation, rotating between Reds Greens and Blues, the arrows allows the user to speed up or slow down the animation
(5) Individual Colors:	By pressing a color it will be possible to brighten or dim that specific color White: In Order to activate or deactivate and dim the White channel, the White button needs to be used.
(6) Zone:	By holding down one of the zone button, a zone can be selected and control

Default DMX Addresses:

1 Red
2 Green
3 Blue
4 White